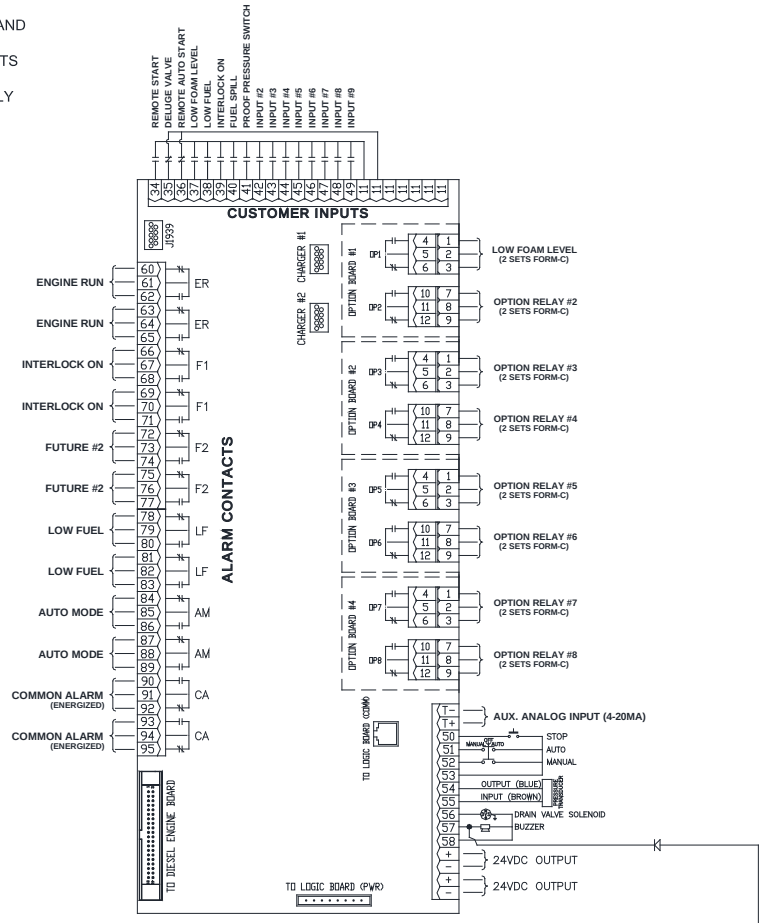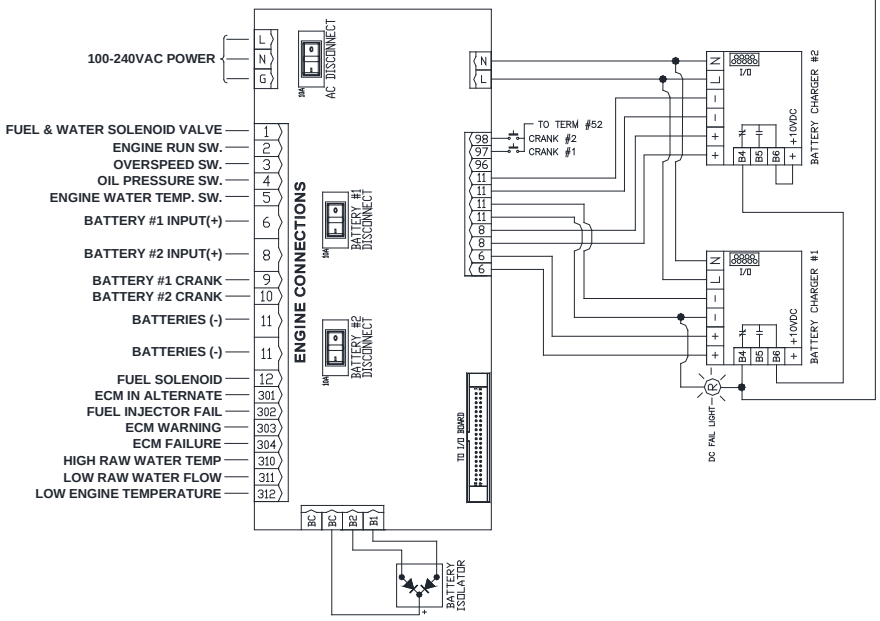NOTES:
1. DELUGE VALVE INPUT AND REMOTE AUTO START INPUT NORMALLY CLOSED. REMOVE JUMPER IF USED.
2. COMMON ALARM OUTPUT NORMALLY ENERGIZED.
3. OUTPUT STATES SHOWN ARE WHEN CONTROLLER IS POWERED AND SET IN OFF MODE.
4. ALARM CONTACTS RATED FOR 8A/250VAC. ENGINE RUN CONTACTS RATED 10A/250VAC.
5. ALARM AND ENGINE WIRES ARE TO BE COPPER CONDUCTOR ONLY