EPCT FIRE - FD20 THREE PHASE WIRING SCHEMATIC

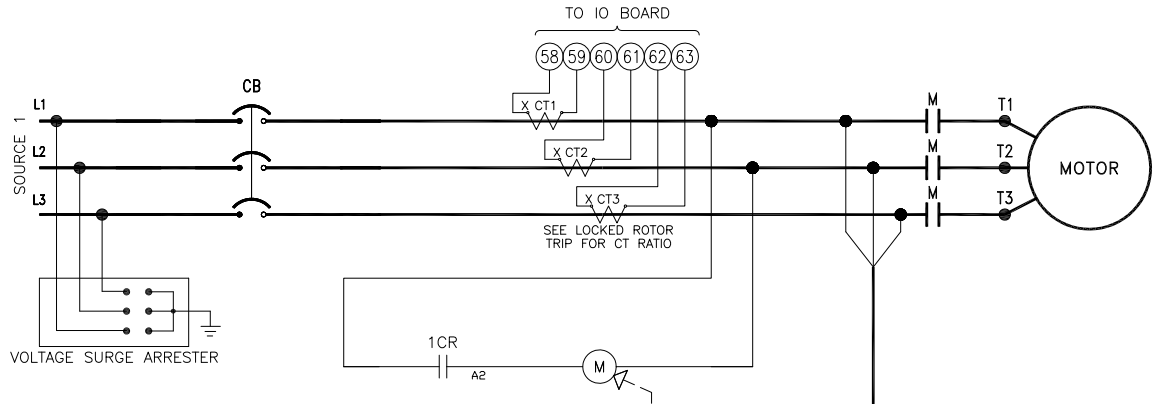

NOTES:
1. POWER/PHASE FAILURE AND COMMON ALARM RELAYS ARE ENERGIZED UNDER NORMAL CONDITIONS.
2. ALL RELAY CONTACTS ARE SHOWN IN NO POWER CONDITION.

LEGEND:
CB - CIRCUIT BREAKER
CT - CURRENT TRANSFORMER
M - RUN CONTACTOR
MSH - MANUAL START HANDLE (EMERGENCY) MICRO SWITCH

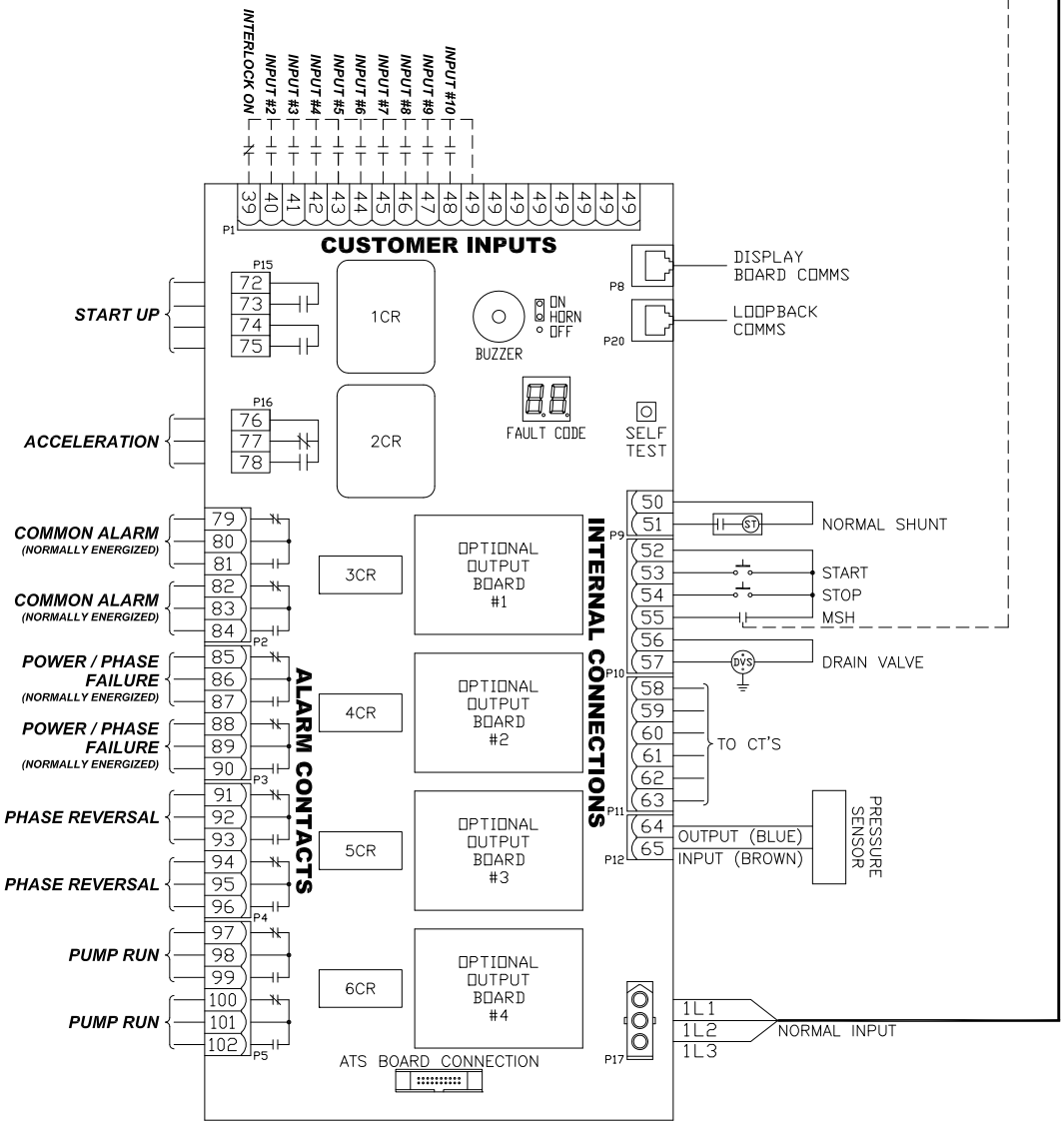

THE INFORMATION ON THIS DOCUMENT IS CREATED BY EATON. IT IS DISCLOSED IN CONFIDENCE AND IS ONLY TO BE USED FOR THE PURPOSE IN WHICH IT IS SUPPLIED.

LES RENSEIGNEMENTS CI-DESSUS ONT ÉTÉ ÉLABORÉS PAR EATON. ILS VOUS SONT DIVULGUÉS EN TOUTE CONFIANCE ET LEUR UTILISATION SE LIMITE AUX SEULES FINS POUR LESQUELLES ILS VOUS SONT TRANSMIS.

REVISION	DATE	DRAWING NO.
001	09/25/18	CE16492H01