Instruction Leaflet **K865V4** August 2018

IP20

Britesign 2

- Product luminaires comply with EN60598-2-22 and are suitable for use in normal interior conditions,
- This luminaire has an ambient temperature range of 0°C to 25°C

1

ONLY INSTALL OUTSIDE ARMS REACH

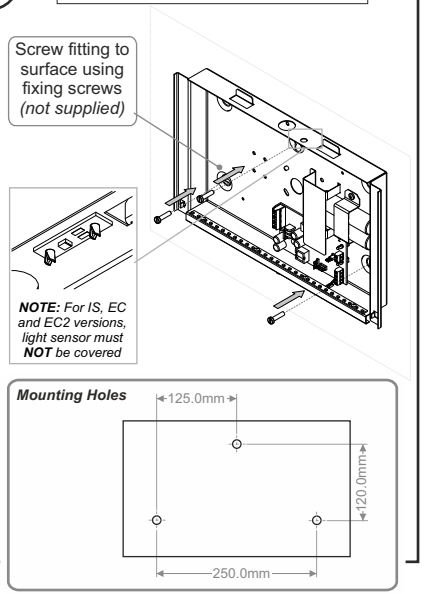

2

Wiring

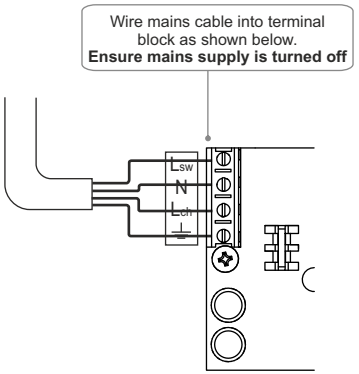

Lsw - Switched Live
N - Neutral (Blue)
Lch - Live (Brown)
⏚ - Earth (Green/Yellow)

LUMINAIRE MUST BE EARTHED

3

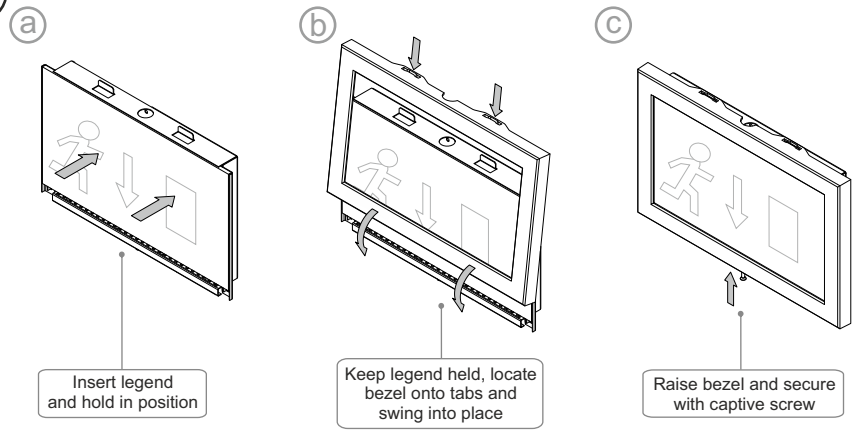

IMPORTANT NOTE: At first fix stage, fit legend with polythene wrap still on to prevent damage to internal components and legend. Remove before project handover.

Safe Operation

1. Check the rating label for voltage and frequency before connecting this luminaire to the electrical supply.
2. Ensure that the mains supply is switched off when working on this luminaire, whether installing or carrying out any other servicing.
3. To prevent damage to driver, do not mix with conventional magnetic ballasts on the same electrical circuit.
4. Where use in more onerous situations is required, e.g. In part-completed buildings before “drying-out” is completed, or areas where ambient temperatures are outside the normal temperature range, then consult our Sales Office.
5. Ensure the fixing is adequate for the luminaire weight.

Servicing and Disposal

1. At commissioning and handing over of installation ensure that a copy of these instructions is presented to the authority responsible for the operation and maintenance of the luminaries.
2. Servicing, e.g. cleaning, must only be carried out after the electricity supply has been switched off. It must not be assumed that luminaries with lamps not lit are switched off-always check before servicing.
3. Cleaning should be carried out at regular intervals to ensure that dirt does not accumulate to an extent that will impair the thermal safety or optical performance of the luminaire. Regular cleaning will also ensure that the optical performance of the luminaries is maintained.
4. Avoid touching the LED strip. To clean - Blow surface with either dry air or nitrogen gas.
5. At the end of life the luminaire is classed as WEEE under directive 2002/96/EC and should be disposed of in accordance with local legislation.

Battery Life

Performance of the luminaire is dependent on the use of the correct type of high temperature nickel-cadmium battery.
Battery life may be impaired if the luminaire is mounted in an ambient temperature greater than 25°C. Store the luminaire or battery between O°C and 25°C. Replace with high temperature nickel-cadmium battery to the manufacturer's recommended part number. Take care not to damage the sleeving. The battery should be replaced when the rated duration is no longer achieved.
Warning: When disposing of the battery do not pierce, incinerate or short circuit. The battery contains cadmium and should therefore be disposed of in accordance with recognised disposal methods.

Note: The LED Strip is non-replaceable but the batteries can be replaced.

EATON
Powering Business Worldwide

Eaton
Wheatley Hall Road, Doncaster, South Yorkshire, DN2 4NB

Sales	**General**	**International Sales**
T: +44 (0)1302 303303	+44 (0)1302 321541	+44 (0)1302 303250
F: +44 (0)1302 367155	+44 (0)1302 303220	+44 (0)1302 303251
E: sales@cooper-ls.com	technical@cooper-ls.com	export@cooper-ls.com