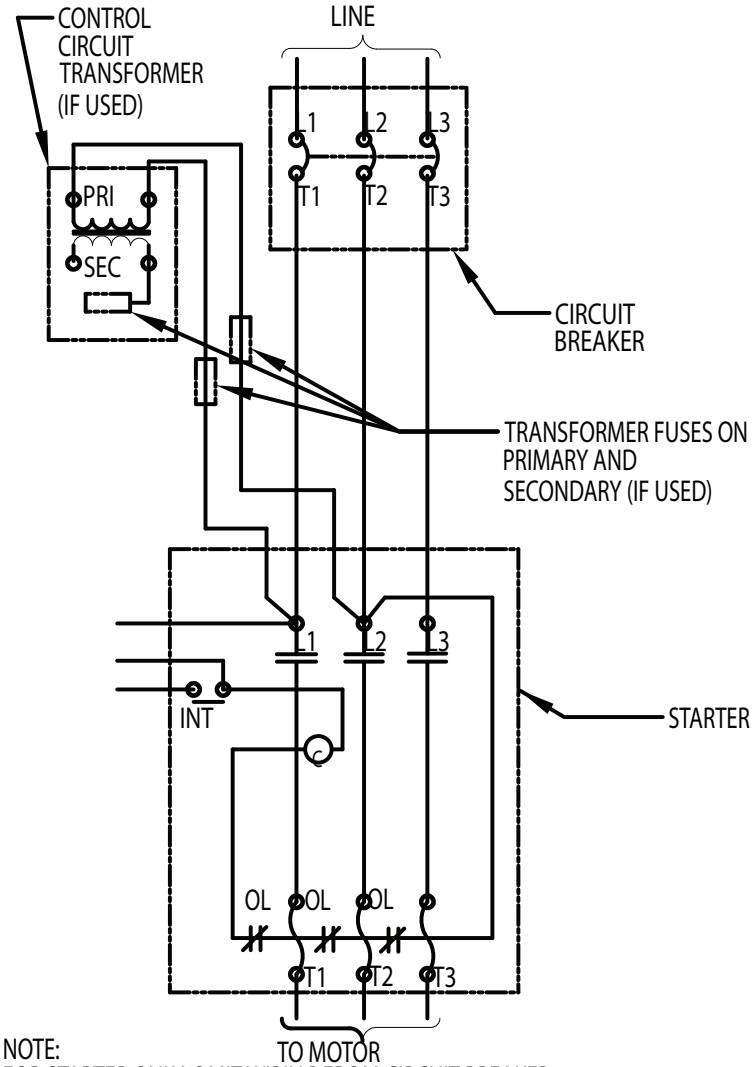

NOTE:
FOR STARTER ONLY, OMIT WIRING FROM CIRCUIT BREAKER TO STARTER AND WIRE LINE DIRECT TO L1, L2 AND L3 OF STARTER.

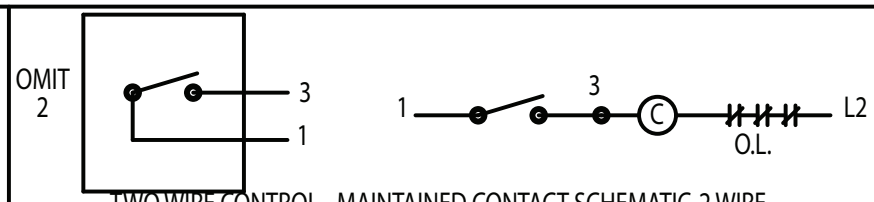

TWO WIRE CONTROL - MAINTAINED CONTACT SCHEMATIC-2 WIRE

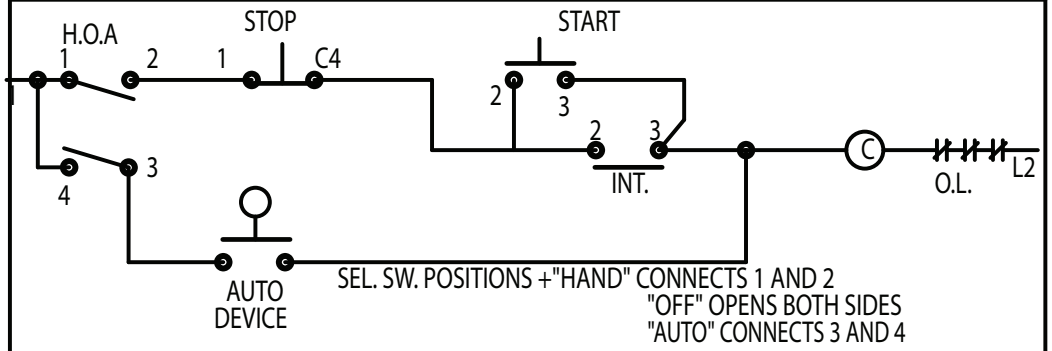

SEL. SW. POSITIONS +"HAND" CONNECTS 1 AND 2
"OFF" OPENS BOTH SIDES
"AUTO" CONNECTS 3 AND 4

HAND-OFF-AUTO. SEL.SW. WITH START-STOP STATION

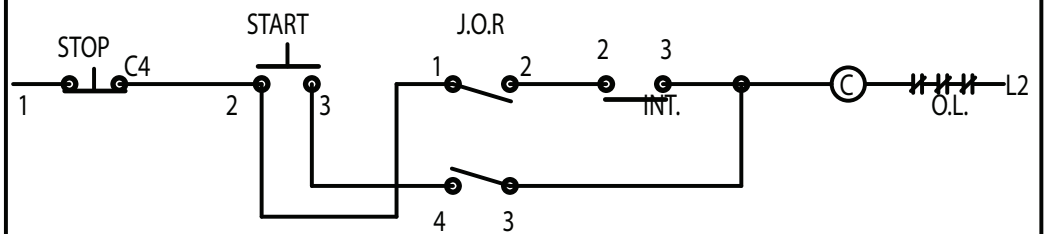

SEL .SW. POSITIONS+"JOG" CONNECTS 3 AND 4 ONLY
"RUN" CONNECTS 1 AND 2,3 AND 4
"OFF" OPENS BOTH SIDES

JOG-OFF-RUN SEL.SW. WITH START-STOP STATION

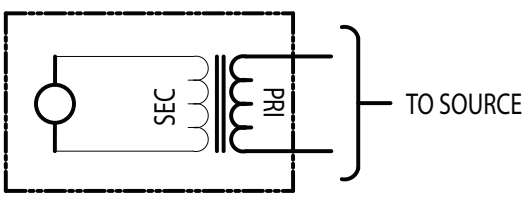

NOTE: EXTRA INTERLOCKS ON STARTERS FOR CONTROL OF PILOT LIGHTS ARE OPTIONAL INFORMATION ON REQUEST.

PILOT LIGHT WITH INTEGRAL TRANSFORMER

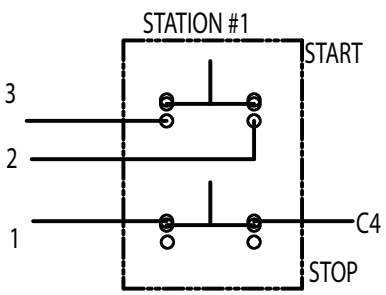

LOCAL OR REMOTE IF ONLY STATION#1 IS USED,JUMPER 2-C4

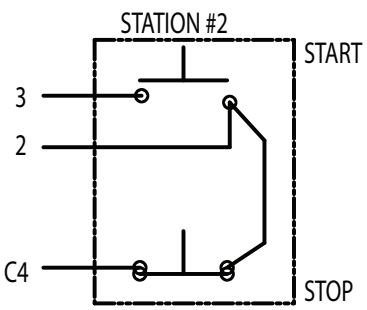

REMOTE IF ONLY STATION#2 IS USED.
CONNECT "C4" TO "1" AT STARTER.

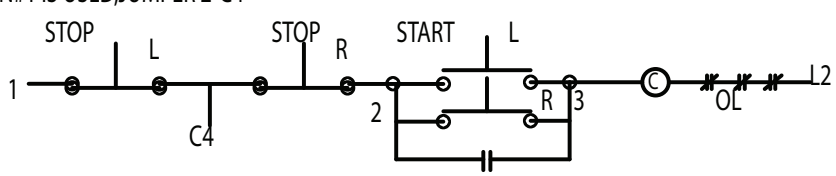

CONTROL STATION CONNECTION SCHEMATIC-3 WIRE

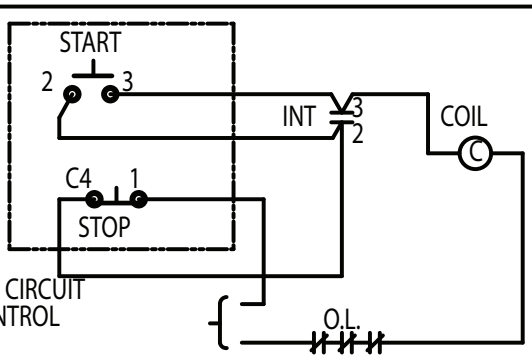

NOTE: IF STARTER IS WIRED WITH A JUMPER BETWEEN L2 AND OVERLOAD RELAY CONTACT, THIS JUMPER MUST BE REMOVED.

CONNECTION FOR SEPARATE CONTROL CIRCUIT OR CONTROL CIRCUIT TRANSFORMER

IF 1149 Revision 2, Revised 10/16, Supercedes 01/88
0206773

Eaton Corporation
Crouse-Hinds Division
Syracuse, NY 13208 USA