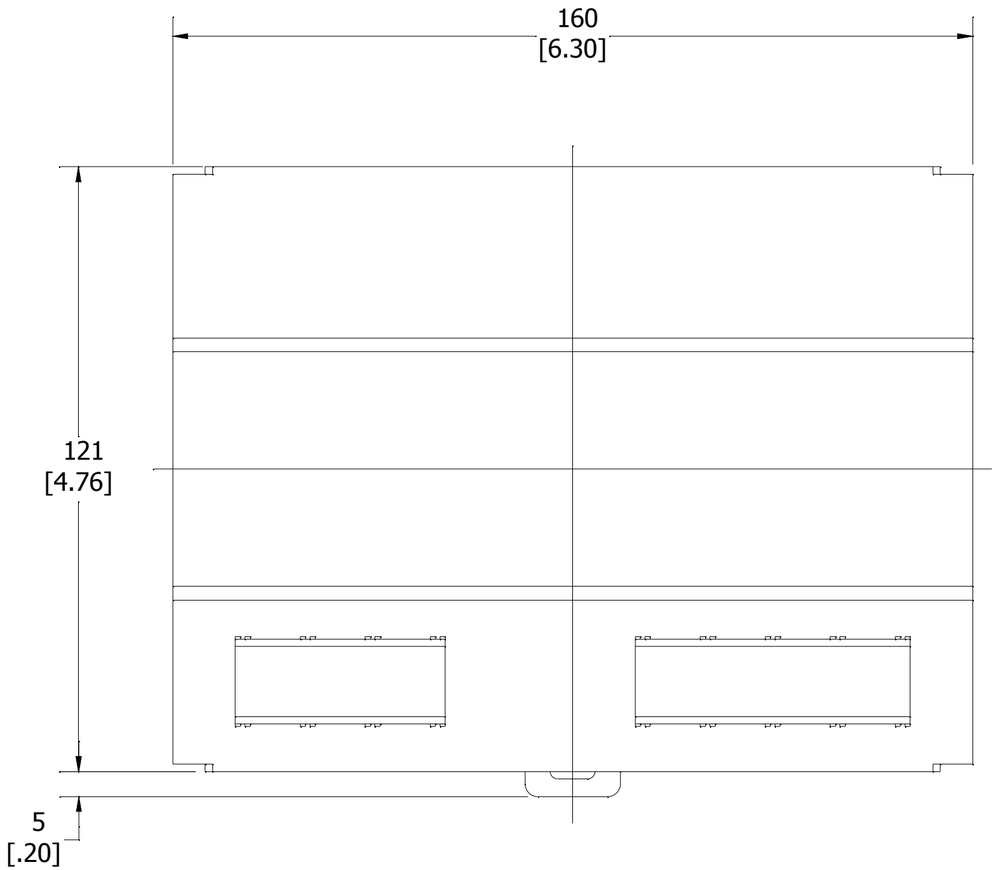

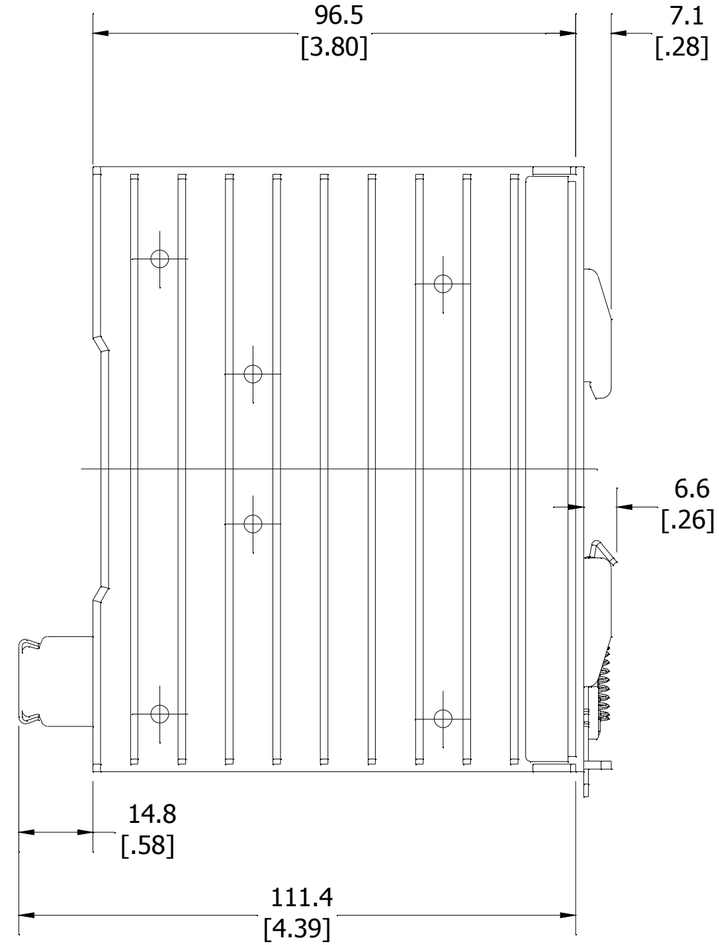

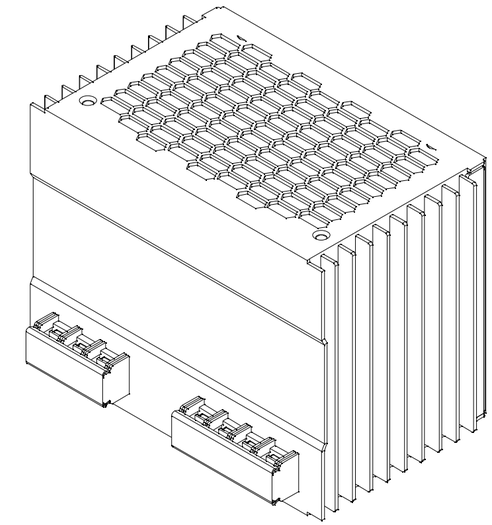

TITLE	DRAFTER/DESIGNER	DATE (YYYY/MM/DD)
PSG POWER SUPPLY SINGLE PHASE 480W 100-240VAC INPUT, 24VDC/20A OUTPUT	GP/JS	2014/05/09

EATON CORPORATION - CONFIDENTIAL AND PROPRIETARY

NOTICE TO PERSONS RECEIVING THIS DOCUMENT AND/OR TECHNICAL INFORMATION

THIS DOCUMENT, INCLUDING THE DRAWING AND INFORMATION CONTAINED THEREON, IS CONFIDENTIAL AND IS THE EXCLUSIVE PROPERTY OF EATON CORPORATION, AND IS MERELY ON LOAN AND SUBJECT TO RECALL BY EATON AT ANY TIME. BY TAKING POSSESSION OF THIS DOCUMENT, THE RECIPIENT ACKNOWLEDGES AND AGREES THAT THIS DOCUMENT CANNOT BE USED IN ANY MANNER ADVERSE TO THE INTERESTS OF EATON AND THAT NO PORTION OF THIS DOCUMENT MAY BE COPIED OR OTHERWISE REPRODUCED WITHOUT THE PRIOR WRITTEN CONSENT OF EATON. IN THE CASE OF CONFLICTING CONTRACTUAL PROVISIONS, THIS NOTICE SHALL GOVERN THE STATUS OF THIS DOCUMENT.

© 2014 Eaton Corporation, All Rights Reserved

SIZE	DRAWING NUMBER	REVISION
B	PSG480E	002

UNLESS OTHERWISE SPECIFIED DIMENSIONS IN MILLIMETERS [INCHES]

SCALE: N/A

SHEET: 1 OF 1