10316H2027

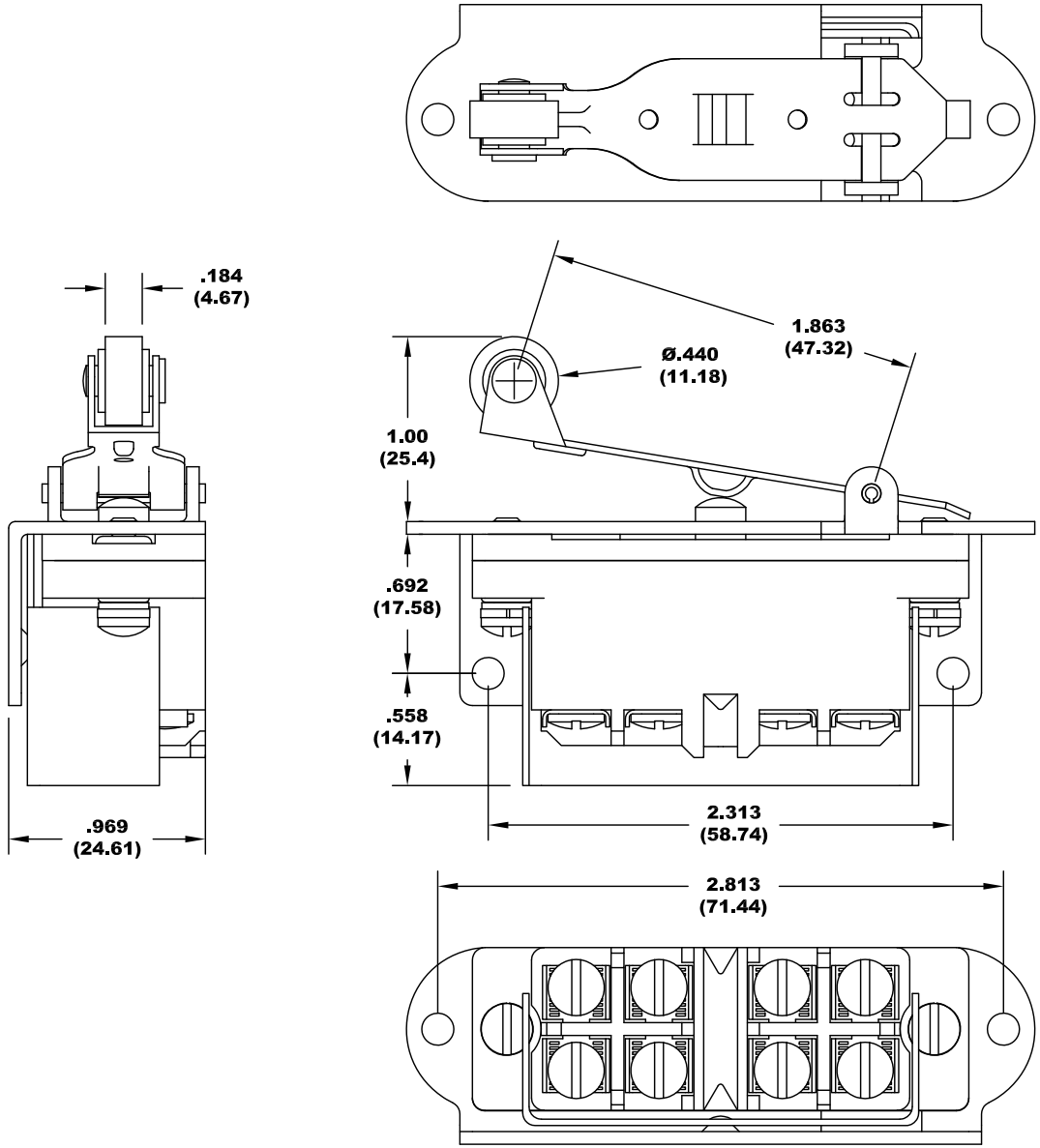

DATE	REV	DESCRIPTION	DWN	ENG	MFG	OTHR
--	--	-	--	--	--	-
--	--	-	--	--	--	-
--	--	-	--	--	--	-
--	--	-	--	--	--	-
--	--	-	--	--	--	-
--	--	-	--	--	--	-
--	--	-	--	--	--	-

PROPRIETARY NOTICE

NOTICE TO ALL PERSONS RECEIVING THIS INFORMATION.

THE INFORMATION DISCLOSED HEREIN IS THE CONFIDENTIAL INFORMATION OF EATON CORP, IS DISCLOSED IN STRICT CONFIDENCE AND SHALL NOT BE REPRODUCED, DISCLOSED OR USED IN ANY MANNER WITHOUT THE WRITTEN CONSENT OF EATON CORPORATION. COPYRIGHT EATON CORPORATION. ALL RIGHTS RESERVED.

THIRD ANGLE PROJECTION

◪ = CRITICAL DIMENSION TO BE INSPECTED

UNLESS OTHERWISE SPECIFIED DIMENSIONS ARE IN INCHES TOLERANCES ARE:

DECIMAL:	ANGULAR:
.XX ± .01 .XXX ± .005 .XXXX ± .001	∠ ±30'

MATL:
.
.

FINISH:
.
.

DWN	H. WEYMOUTH
DATE	11/13/2011
CHK	---
ENG	---
MFG	---
OTHR	---
OTHR	---
SCALE: .	SHT 1 OF 1

EATON
6500 HARBOUR HT'S PKWY
SUITE 320
MUKILTEO, WA 98275
(425) 349-5240

10316 Special Purpose Roller Lever, Top Right Hand Mounting Bracket

SIZE	DRAWING NO. (AutoCAD)	REV
A	90-27839-023	01