Eaton Technical Furniture

Installation Guide 1-Apr-14

9U Rack Mount Module
Publication No: MN210002EN

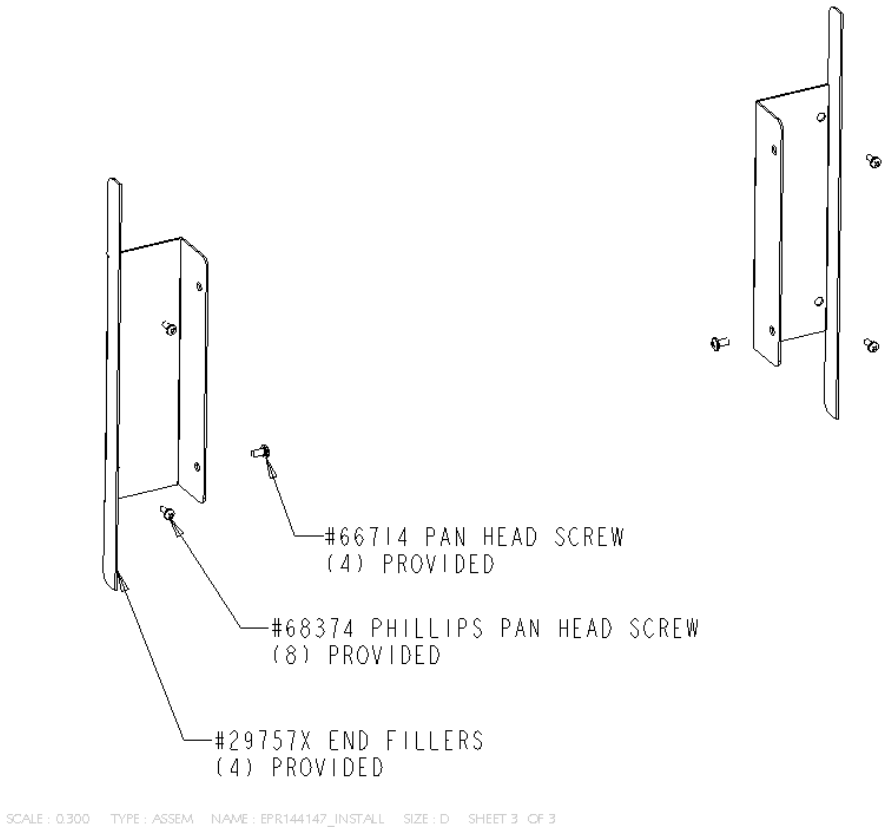

Powering Business Worldwide

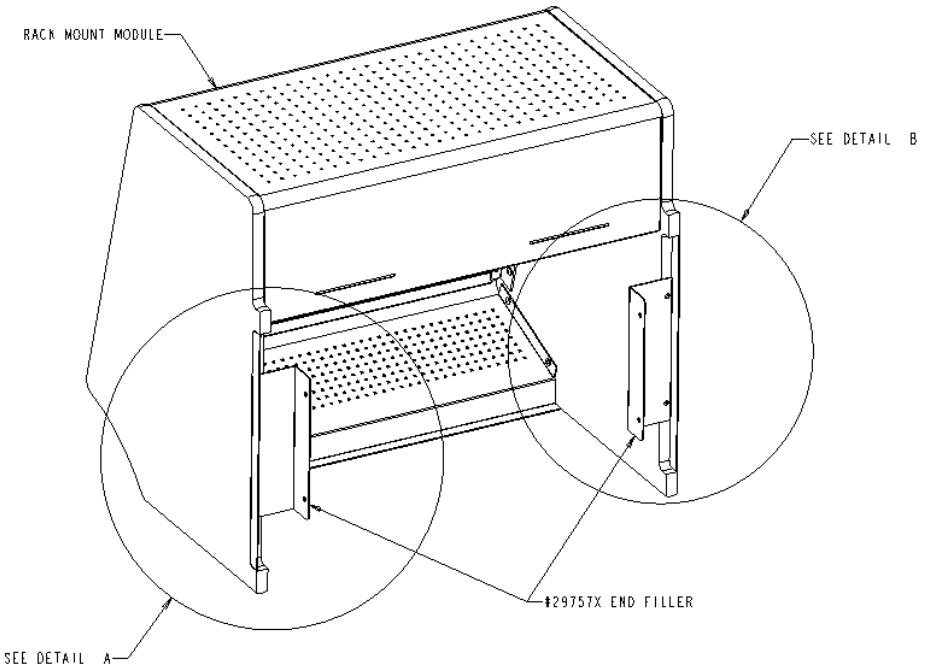

FIGURE 1

SCALE : 0.300 TYPE : ASSEM NAME : EPR144147_INSTALL SIZE : D SHEET 1 OF 3

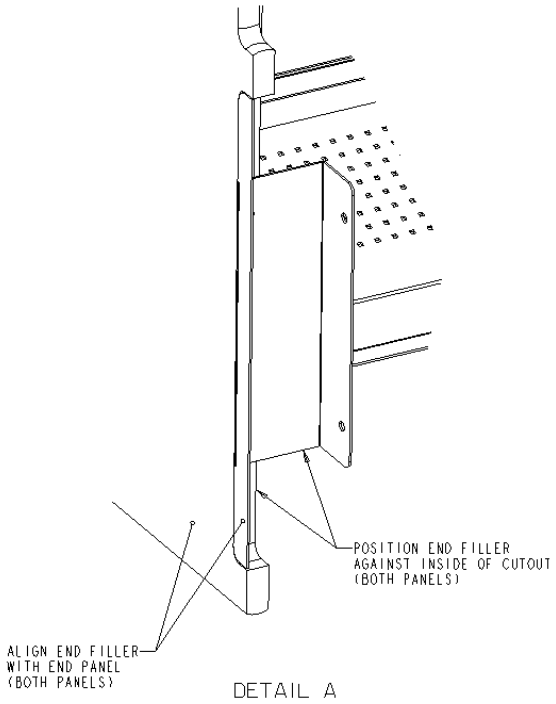

DETAIL A

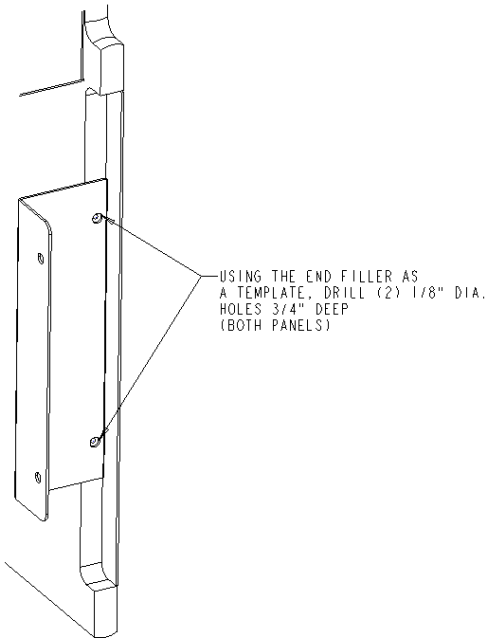

DETAIL B

SCALE : 0.300 TYPE : ASSEM NAME : EPR144147_INSTALL SIZE : D SHEET 1 OF 3

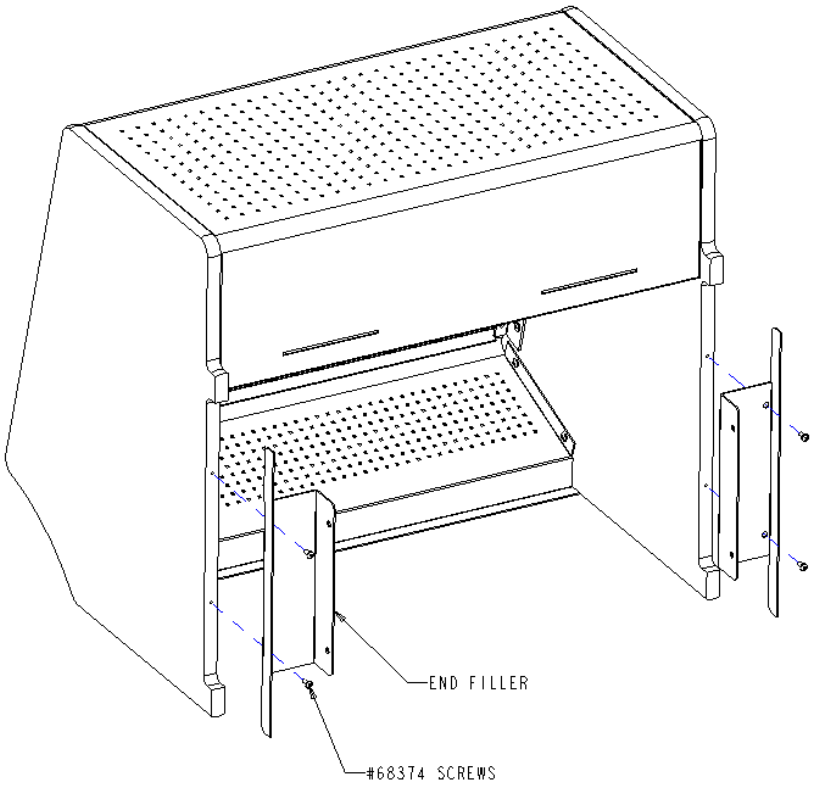

FIGURE 2

INSTALL THE END FILLERS USING
THE #8 AB X .500 PHILLIPS
PAN HEAD SCREWS PROVIDED.

SCALE : 0.300 TYPE : ASSEM NAME : EPR144147_INSTALL SIZE : D SHEET 1 OF 3

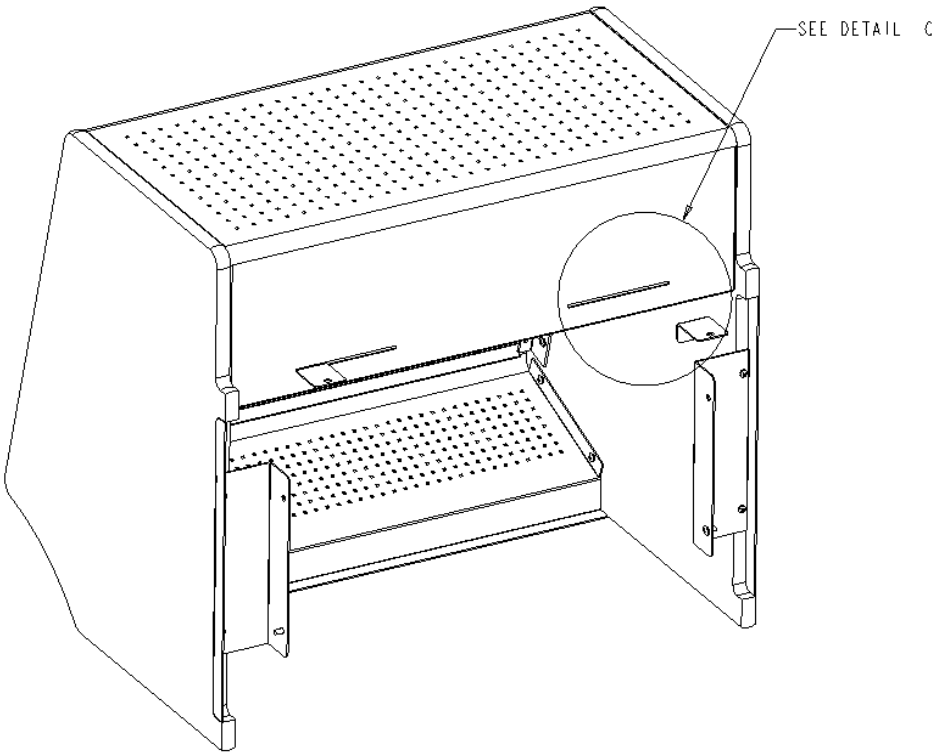

FIGURE 3

SCALE : 0.300 TYPE : ASSEM NAME : EPR144147_INSTALL SIZE : D SHEET 2 OF 3

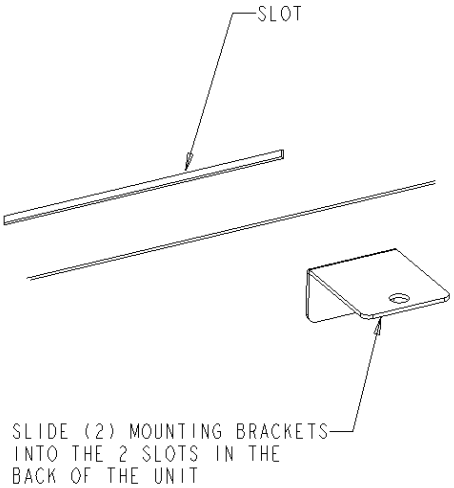

DETAIL C

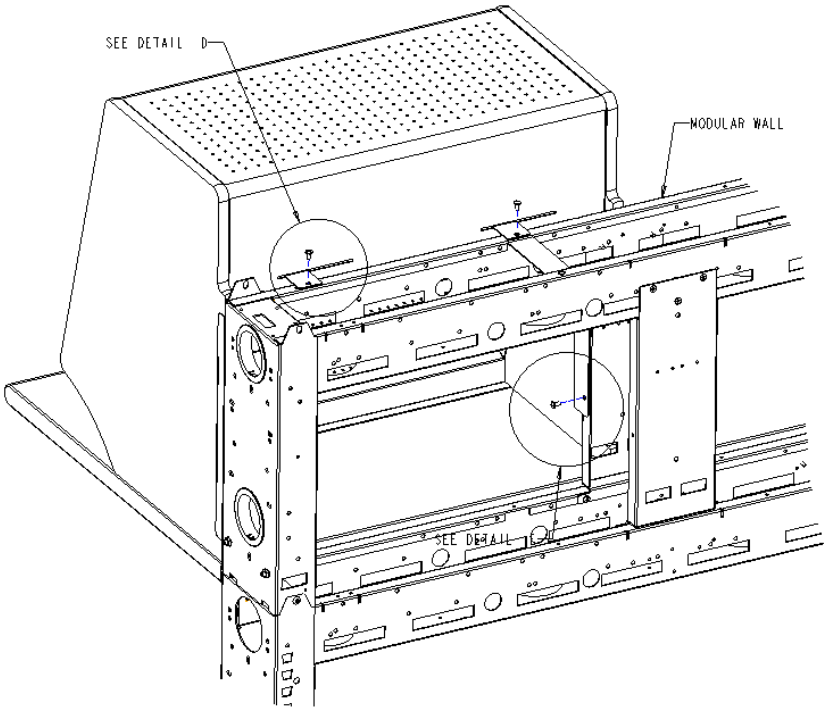

FIGURE 4

SCALE : 0.300 TYPE : ASSEM NAME : EPR144147_INSTALL SIZE : D SHEET 2 OF 3

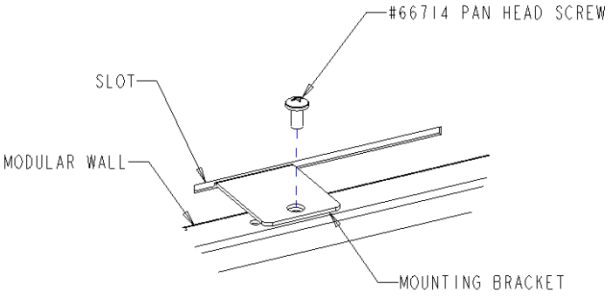

ALIGN THE HOLES IN THE MOUNTING BRACKETS WITH THE HOLES IN THE TOP OF THE MODULAR WALL. SECURE USING (2) PAN HEAD SWAGEFORM SCREWS.

DETAIL D

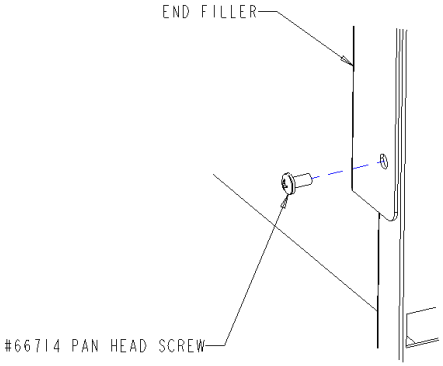

DETAIL E

SCALE : 0.300 TYPE : ASSEM NAME : EPR144147_INSTALL SIZE : D SHEET 2 OF 3

SCALE : 0.300 TYPE : ASSEM NAME : EPR144147_INSTALL SIZE : D SHEET 2 OF 3