REVISIONS				
REV	DESCRIPTION	BY	ECO	DATE
B	UPDATE TITLE BLOCK	F. MONTANO	0106400	1/14/2015

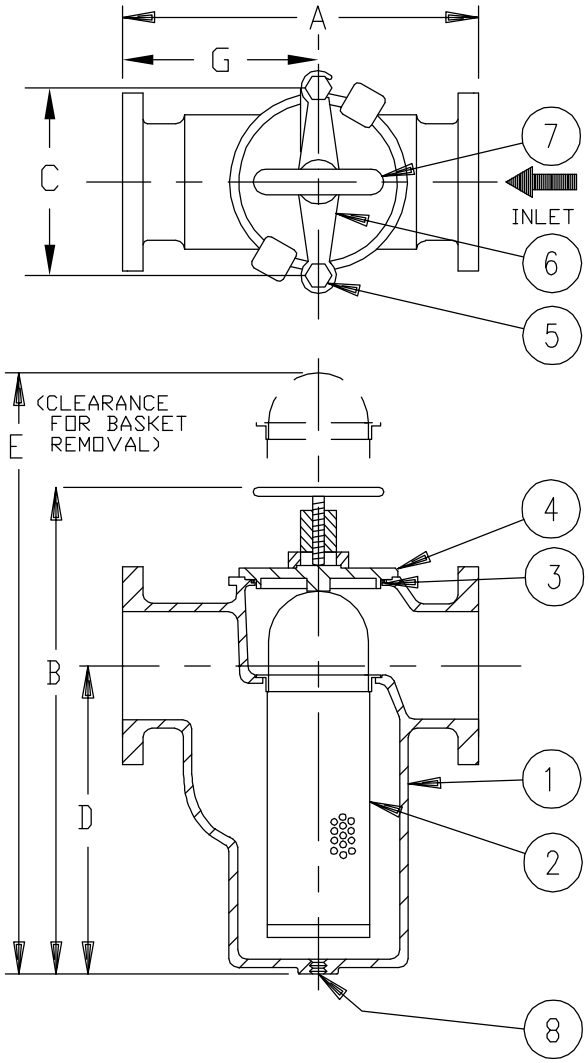

NO.	PART NAME	MATERIAL
1	BODY	BRONZE
2	SCREEN	
	PERF. DIA.	
	MESH	
3	O-RING	BUNA-N
4	COVER	BRONZE
5	STUD	STEEL
6	YOKE	DUCTILE IRON
7	YOKE SCREW	STEEL
8	DRAIN PLUG	BRASS

NOTES:

1. INLET/OUTLET 150 LB. FLANGED CONNECTIONS PER ASME B16.24.
2. DIMENSION "F" (NPT) IS FOR DRAIN PLUG, ITEM 8.
3. MAX. WORKING PRESSURE : 200 PSI @ 100° F (13.8 BAR @ 37.8° C)

PIPE SIZE (NOMINAL)	DIMENSIONS							WEIGHT (DRY)		PART NO.
	A IN. MM.	B IN. MM.	C IN. MM.	D IN. MM.	E IN. MM.	F (NOM.) IN. MM.	G IN. MM.	LBS	KGS	
1" (25mm)	7.63/ 194	8.38/ 213	4.00/ 102	5.00/ 127	13/ 330	1/2 (15)	4.31 / 109	16 /	7	ST072010BF10A
1-1/4" (32mm)	10.25/ 260	11.00/ 279	4.88/ 124	7.00/ 178	16/ 406	3/4 (20)	5.63/ 143	28 /	13	ST072012BF10C
1-1/2" (40mm)	10.25/ 260	11.00/ 279	4.88/ 124	7.00/ 178	16/ 406	3/4 (20)	5.63/ 143	30 /	14	ST072015BF10A

CUSTOMER INFO	
NAME	
P.O. NO.	
TAG NO.	
S.O. NO.	
PART NO.	

DRAWN BY: DM

SCALE: AS DRAWN

RESTRICTION: RESTRICTED

SHEET: 1 OF 1

PROJECTION: THIRD ANGLE

EATON

HYDRAULICS GROUP
FILTRATION DIVISION
GALESBURG, MICHIGAN, USA • TINTON FALLS, NEW JERSEY, USA

TITLE: MODEL 72 SIMPLEX STRAINER 150# FLAT FACE FLANGE SIZES 1" THRU 1-1/2" BRONZE

DATE	SIZE	DWG FILENAME	REV
8/12/97	A	SD072031	B

EATON CORPORATION – CONFIDENTIAL AND PROPRIETARY NOTICE TO PERSONS RECEIVING THIS DRAWING AND/OR TECHNICAL INFORMATION
THIS DOCUMENT, INCLUDING THE DRAWING AND INFORMATION CONTAINED THEREON IS CONFIDENTIAL AND IS THE EXCLUSIVE PROPERTY OF EATON AT ANY TIME. BY TAKING THE POSSESSION OF THIS DOCUMENT THE RECIPIENT ACKNOWLEDGES AND AGREES THAT THIS DOCUMENT CANNOT BE USED IN ANY MANNER ADVERSE TO THE INTEREST OF EATON AND THAT NO PORTION OF THIS DRAWING MAY BE COPIED OR OTHERWISE REPRODUCED WITHOUT THE PRIOR WRITTEN CONSENT OF EATON, IN THE CASE OF CONFLICTING CONTRACTUAL PROVISIONS, THIS NOTICE SHALL GOVERN THE STATUS OF THIS DOCUMENT.
2018 EATON CORPORATION – ALL RIGHTS RESERVED.