NOZZLE SCHEDULE			
ITEM	QTY.	NAME	DESCRIPTION
N1	1	INLET	16"–150# RFSO ANSI B16.5 W/ STD. WT. PIPE
N2	1	OUTLET	16"–150# RFSO ANSI B16.5 W/ STD. WT. PIPE
N3	1	DRAIN	3" NPT 3000# HALF COUPLING
N4	1	VENT	1/2" NPT 3000# HALF COUPLING

REV	DATE	CHANGE	ECR	BY	APP
A	11/12/03	NEW ISSUE	B867	FJM	VA
B	11/1/05	REVISED TITLE BLOCK	D507	FM	LH

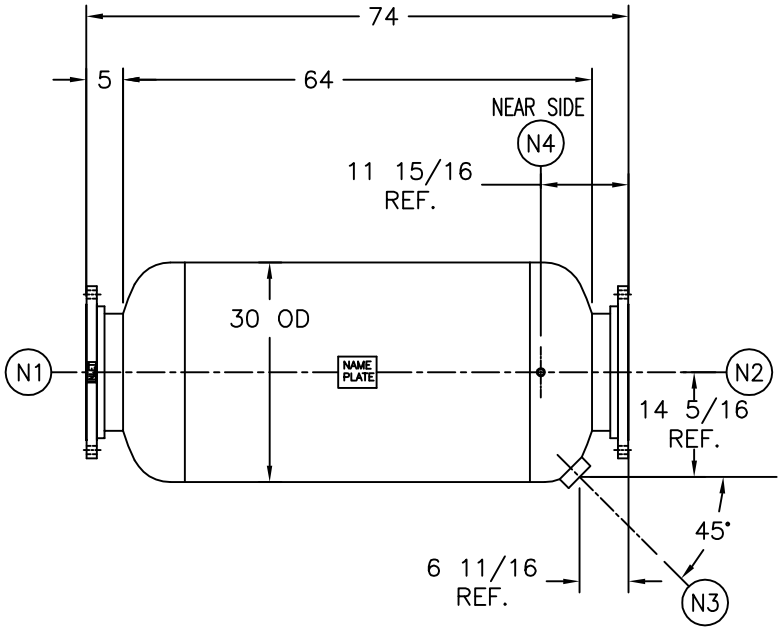

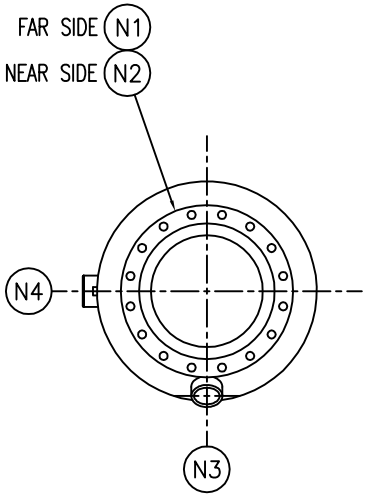

NOTES:

1. UNITS ARE TO BE DESIGNED, FABRICATED & "U" STAMPED IN ACCORDANCE WITH ASME BOILER & PRESSURE VESSEL CODE, SECTION III DIVISION 1,IN COMPLIANCE TO CURRENT PUBLISHED ADDENDA.
2. ALL DIMENSIONS ARE IN INCHES .
3. ALL BOLT HOLES ARE TO STRADDLE NATURAL CENTERLINES.
4. IMPACT TESTING IS NOT REQUIRED. VESSEL IS IN COMFORMANCE WITH UG–20(f), AND/OR UCS–66 AS APPLICABLE
5. SHIPPING WEIGHT: 1100 POUNDS
6. DESIGN DATA:

   DESIGN PRESSURE– 150 PSIG
   DESIGN TEMPERATURE– 450° F
   MIN. DESIGN METAL TEMP.–20° F @ 150 PSIG
   HYDROTEST PRESSURE– 195 PSIG
   CORROSION ALLOWANCE– 0 INCHES
7. MATERIAL : CSTL
8. PAINT: PER ES–317

ELECTRONIC FILE NAME:
SD1631L150CU.DWG

TOLERANCES UNLESS OTHERWISE SPECIFIED PER ENGINEERING STANDARD ES– ––

UNAUTHORIZED USE, MANUFACTURE OR REPRODUCTION IN WHOLE OR IN PART IS PROHIBITED. DRAWING, DESIGN AND OTHER DISCLOSURES PROPERTY OF EATON FILTRATION, LLC

CUSTOMER:
REG. NO.:
P.O. NO.:
TAG NO.:
PART NO.: 1631L150CU

EATON FILTRATION, LLC
900 FAIRMOUNT AVENUE, ELIZABETH, NEW JERSEY 07207

NAME 16" TYPE "31L" GAS/LIQUID SEPARATOR 150# FLG. C/STL.

DRAWN	FJM	DATE	11/14/03	CHECKED	LH	DATE	11/14/03
APP	VA	DATE	11/14/03	SCALE	NTS	ECR	B867
SIZE A	DWG NO	SD1631L150CU				REV	B