NOZZLE SCHEDULE			
ITEM	QTY.	NAME	DESCRIPTION
N1	1	INLET	3" 150# RFSO ASME B16.5
N2	1	OUTLET	3" SCH 10S PIPE
N3	1	DRAIN	1-1/2" NPT 3000# COUPLING

REV	DATE	CHANGE	ECR	BY	APP
A	10/02/03	NEW RELEASE	B749	VA	FM
B	12/05/03	DELETED NAMEPL. BRACKET, NAMEPL., INLET TAG, ADDED EXHAUST HEAD NAMEPL.	B892	LH	FM
C	11/1/05	REVISED TITLE BLOCK	D507	FM	LH

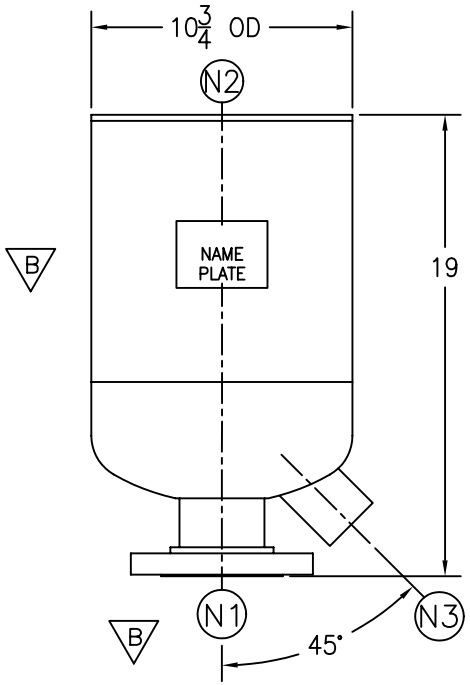

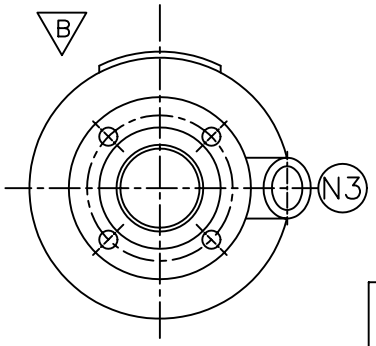

NOTES:

1. ALL DIMENSIONS ARE IN INCHES.
2. ALL BOLT HOLES ARE TO STRADDLE NATURAL CENTERLINES.
3. SHIPPING WEIGHT: 65 POUNDS.
4. DESIGN DATA:

DESIGN PRESSURE–	ATMOSPHERIC
DESIGN TEMPERATURE–	AMBIENT
CORROSION ALLOWANCE–	0 INCHES

5. MATERIAL: 304/304L STAINLESS STEEL

CUSTOMER:
REG. NO.:
P.O. NO.:
TAG NO.:
PART NO.: 3EHS

ELECTRONIC FILE NAME:
SD3EHS316.DWG

TOLERANCES UNLESS OTHERWISE SPECIFIED PER ENGINEERING STANDARD ES– ––

UNAUTHORIZED USE, MANUFACTURE OR REPRODUCTION IN WHOLE OR IN PART IS PROHIBITED. DRAWING, DESIGN AND OTHER DISCLOSURES PROPERTY OF EATON FILTRATION, LLC

EATON FILTRATION, LLC
900 FAIRMOUNT AVENUE, ELIZABETH, NEW JERSEY 07207

NAME 3" TYPE "40-EHMF" EXHAUST HEAD 150# FLG 304/304L SSTL

DRAWN	VA	DATE	10/02/03	CHECKED	FM	DATE	10/02/03
APP	––	DATE	––	SCALE	NTS	ECR	B749
SIZE A	DWG NO	SD3EHS				REV	C