EM2791 Series
EuroMag Terminal Blocks
Screwless; 10.16 Centers

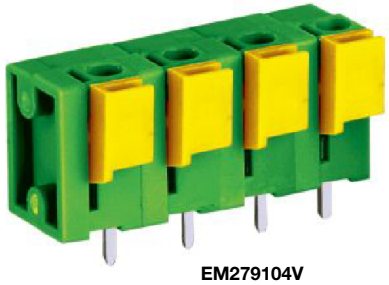

EM279104V

SPECIFICATIONS
Rating: 10A, 300V
Center Spacing: 0.40" (10.16mm)
Wire Range: #14-24 AWG
Housing Material: UL rated 94V0 Thermoplastic
Contact Material: Tin-Plated Brass
Operating Temperature: 105°C (221°F) max., -40°C (-40°F) min.
Recommended PCB Hole Diameters: 0.051" (1.30mm)
Construction: Mold-to-Length
Agency Information: File E62622; CE Certified

Poles	L (mm)	Poles	L (mm)
2	17.78	10	99.06
3	27.94	11	109.22
4	38.10	12	119.38
5	48.26	13	129.54
6	58.42	14	139.70
7	68.58	15	149.86
8	78.74	16	160.02
9	88.90		

To convert to inches, divide by 25.4

Dimensions - mm (in)

VERTICAL

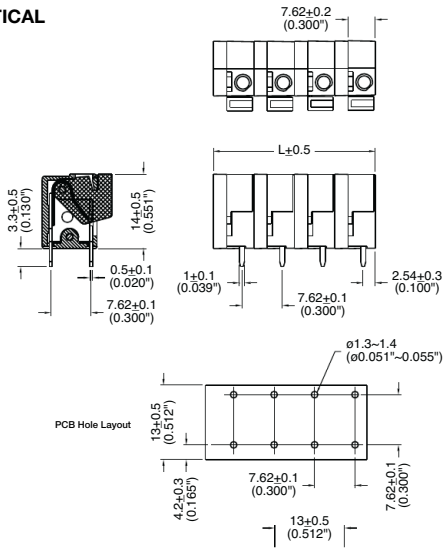

HORIZONTAL

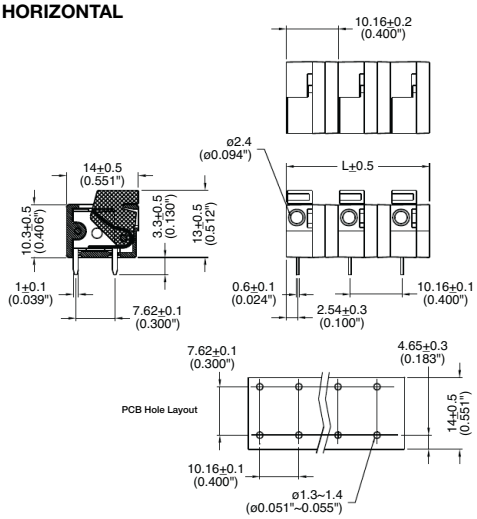

Part Numbering System

Series	# of Poles	Orientation
E M 2 7 9 1	☐☐	☐
	02 to **16**	**H** - horizontal **V** - vertical