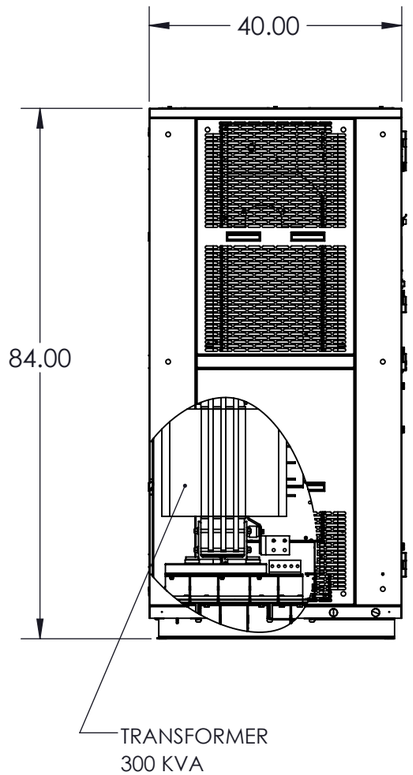

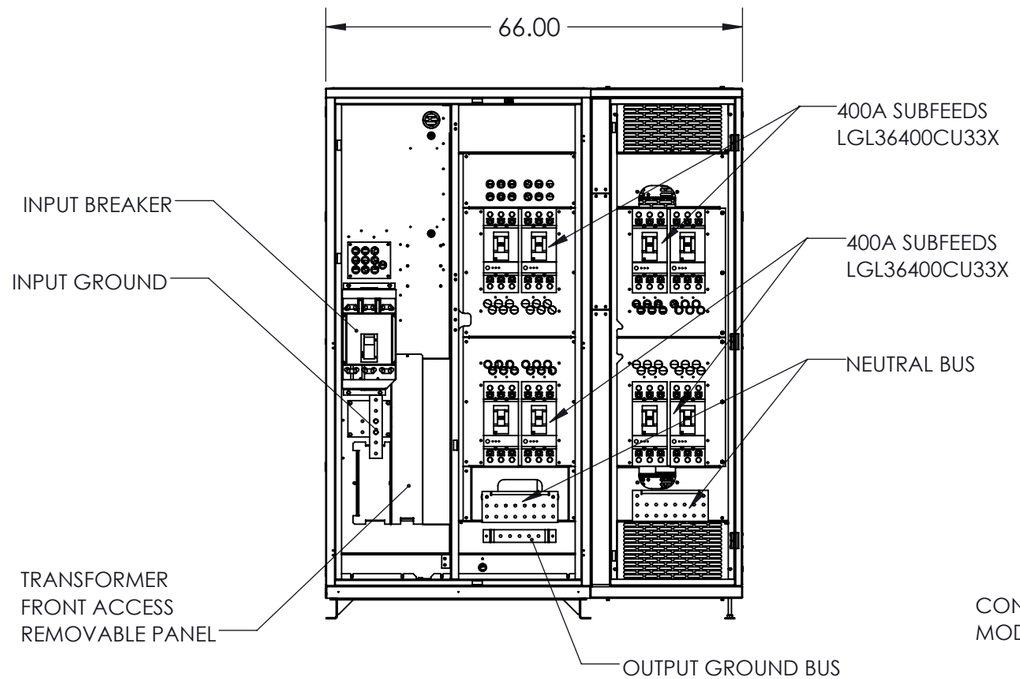

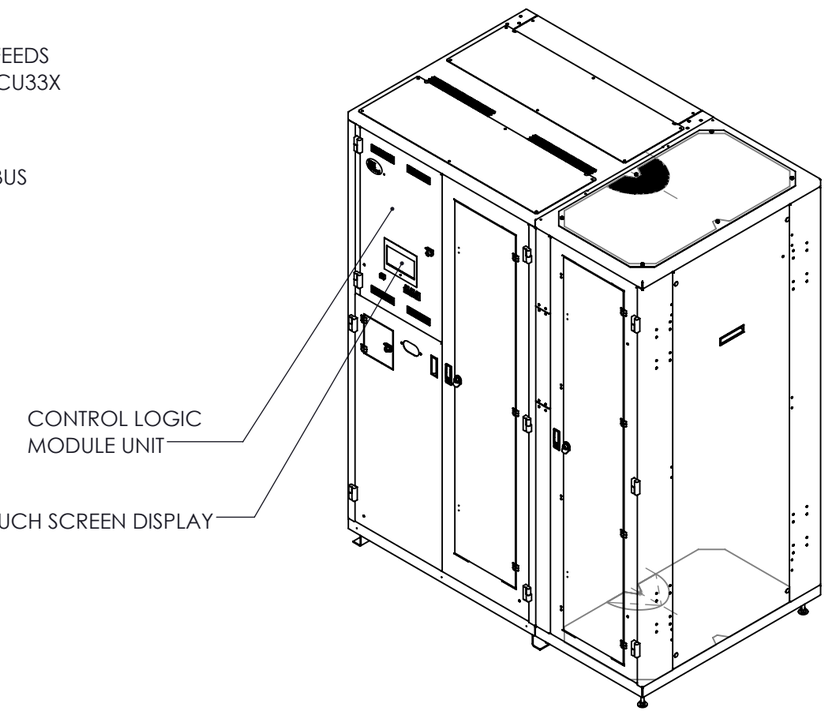

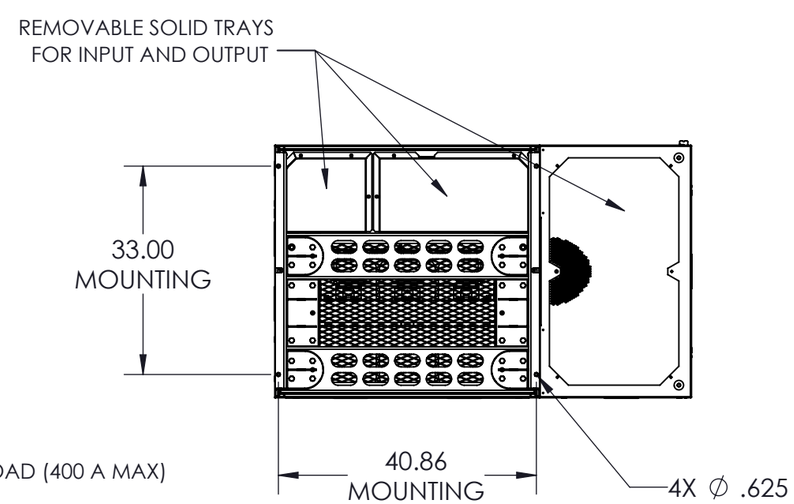

GENERAL SPECIFIED

CABINET CHARACTERISTIC:
ENCLOSURE : NEMA 1
LOCATION : INDOOR

MECHANICAL:
MOUNTING: BOLT DOWN ON CONCRETE OR FLOOR STAND
MATERIAL: STEEL
WEIGHT : 3500 LBS. APPROX.

ELECTRICAL:
INPUT #1: 480 VAC 3PH-4W W/GND @ 60 HZ, 500A MAX.
OUTPUT SUBFEEDS #1-8: 120/208 VAC, 100% CONTINUOUS LOAD (400 A MAX)
(2 EA. # 2/O-500 MCM AL/CU)

ENVIROMENTAL:
OPERATING AMBIENT TEMPERATURE 0°C TO 40°C (32° F TO 104°F)
RELATIVE HUMIDITY: 0% TO 95 % NON-CONDENSING
ALTITUDE: 10,000 FT MAX

UNLESS OTHERWISE SPECIFIED:
DIMENSIONS ARE IN INCHES
[ ] IN MILLIMETER
ANGULAR: ±0.5° BEND ±1°
TWO PLACE DECIMAL ±0.02
THREE PLACE DECIMAL ±0.005

THIS DRAWING CONTAINS CONFIDENTIAL & PROPRIETARY INFORMATION AND SHALL NOT BE DISCLOSED OR COPIED WITHOUT THE EXPRESSED, WRITTEN PERMISSION OF SMITHS POWER

PDI

THIRD ANGLE PROJECTION

DO NOT SCALE DRAWING

APPROVALS		DATE
DRAWN	RAE	3/28/17
CHECKED	WB	3/28/17
ENG. APPR.		

TITLE: PP2 OUTLINE
300 KVA, (8) 400A SUBFEEDS

SIZE	DWG. NO.	REV
B	PDU56857	A
	PART NO.	SHEET 1 OF 1