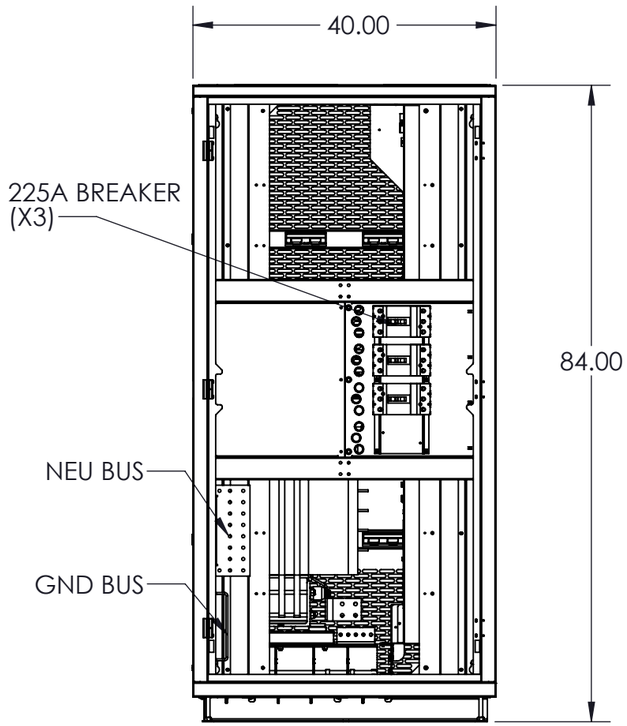

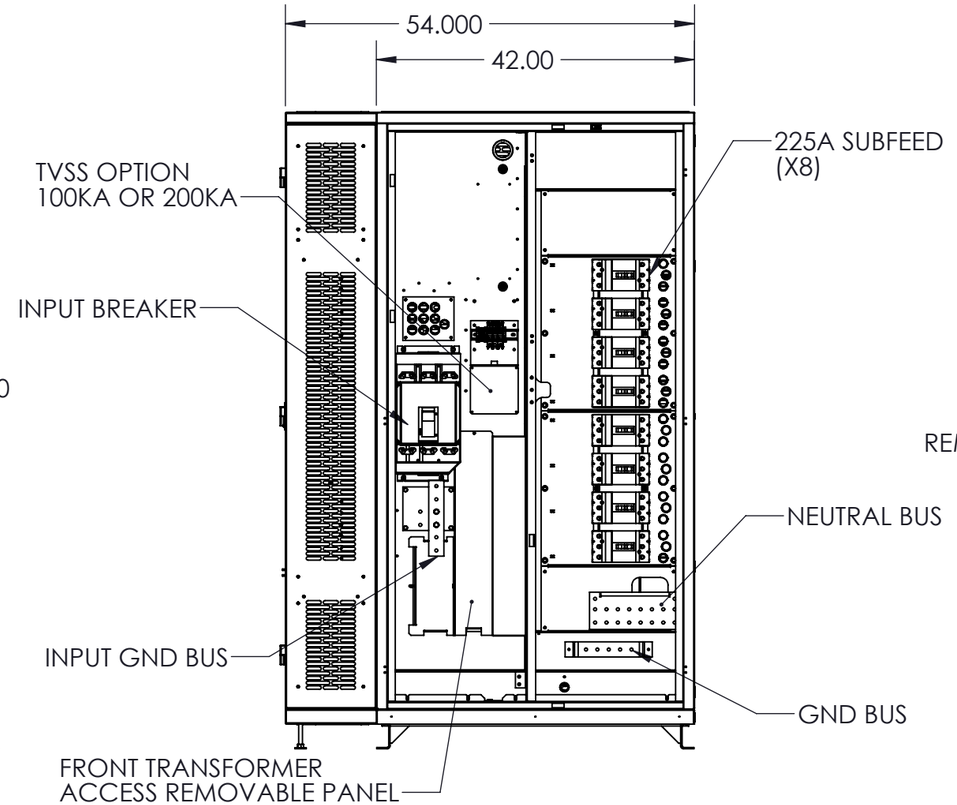

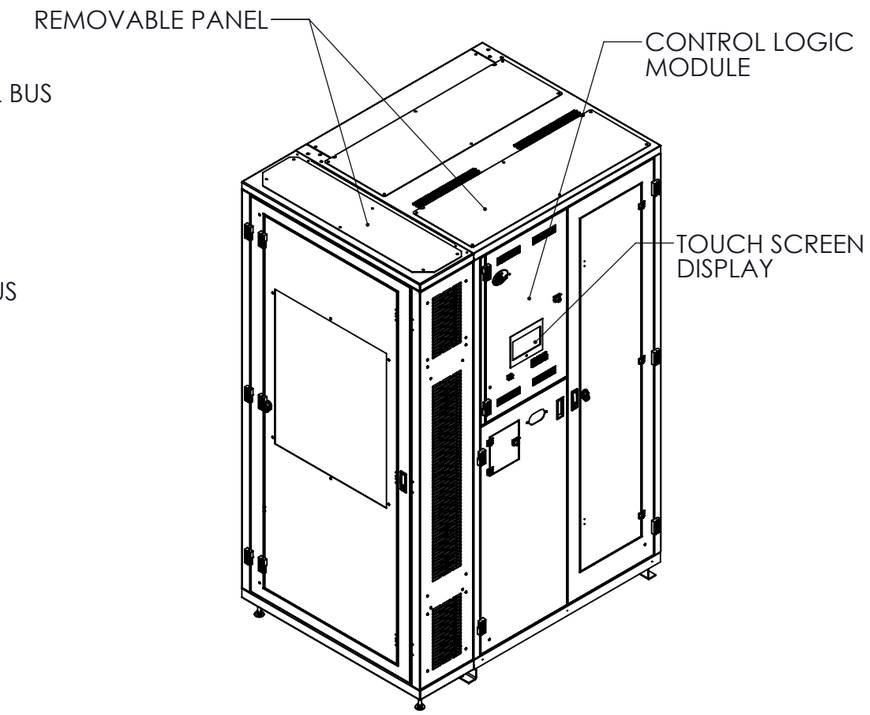

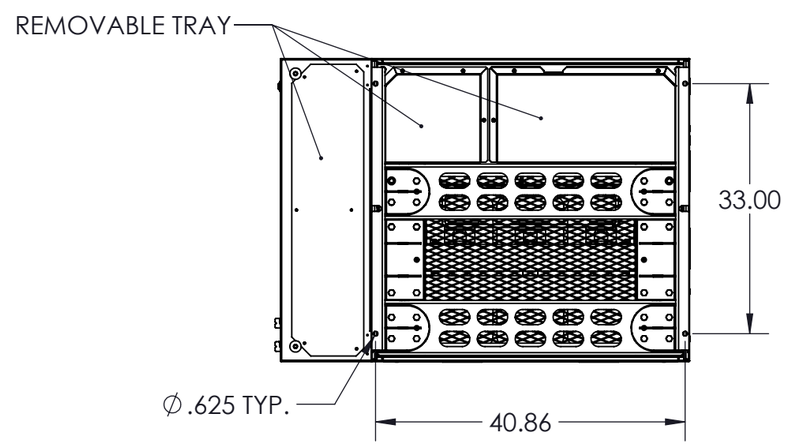

GENERAL SPECIFIED

CABINET CHARACTERISTIC:
ENCLOSURE : NEMA 1
LOCATION : INDOOR

MECHANICAL:
MOUNTING: BOLT TO CONCRETE FLOOR OR FLOOR STAND
MATERIAL: STEEL
WEIGHT : 3500 LBS. APPROX.

ELECTRICAL:
INPUT #1: 600 VAC MAX 3PH W/GND @ 60 HZ, RANGE FROM 225A TO 1200A
OUTPUT SUBFEED #1 - #11: 3-POLE, 600VAC MAX, 225A

RECOMMEND A MINIMUM OF 36" IN REAR OR SIDE OF UNIT FOR MAINTENANCE
MINIMUM OF 36" CLEARANCE FOR DOOR SWING
RECOMMEND 6" CLEARANCE BETWEEN VENTILATED SIDE AND WALL FOR PROPER COOLING

UNLESS OTHERWISE SPECIFIED:
DIMENSIONS ARE IN INCHES
[ ] IN MILLIMETER
ANGULAR: ±0.5° BEND ±1°
TWO PLACE DECIMAL ±0.02
THREE PLACE DECIMAL ±0.005

THIRD ANGLE PROJECTION

DO NOT SCALE DRAWING

APPROVALS		DATE
DRAWN		
CHECKED		
ENG. APPR.		

THIS DRAWING CONTAINS CONFIDENTIAL & PROPRIETARY INFORMATION AND SHALL NOT BE DISCLOSED OR COPIED WITHOUT THE EXPRESSED, WRITTEN PERMISSION OF SMITHS POWER

PDI

TITLE:
POWERPAK 2 OUTLINE DRAWING
(8) 225A SUBFEED IN MAIN CAB
(3) 225A SUBFEED IN SIDE CAR

SIZE	DWG. NO.	REV
B	PDU56425	A
	PART NO.	SHEET 1 OF 1