DWG NO.	SH	REV
2715 G01	2	E

REVISIONS

REV	CHG. NO.	DESCRIPTION	DATE	BY	CHKR	ENGR
D	ECN-6425	REMOVE 10-32 HEX HEAD SCREWS; 3/8 X 1 BOLT WAS 1 1/2	8-30-99	GRD	CDP	CDP
E	ECN-6580	NO CHANGES TO THIS SHEET, SEE SHEET 1.	2-9-00	GRD	RGW	CDP

NOTE:
FOR INFORMATION NOT SHOWN
SEE DETAILS ON ANCHORAGE TO
STRUCTURAL SLAB

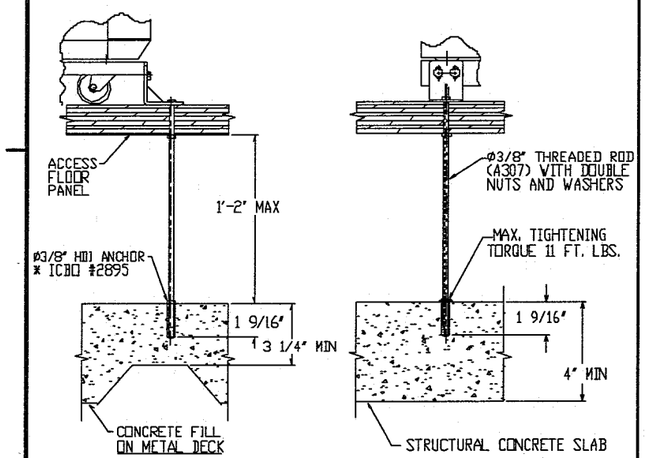

ANCHORAGE TO ACCESS FLOOR

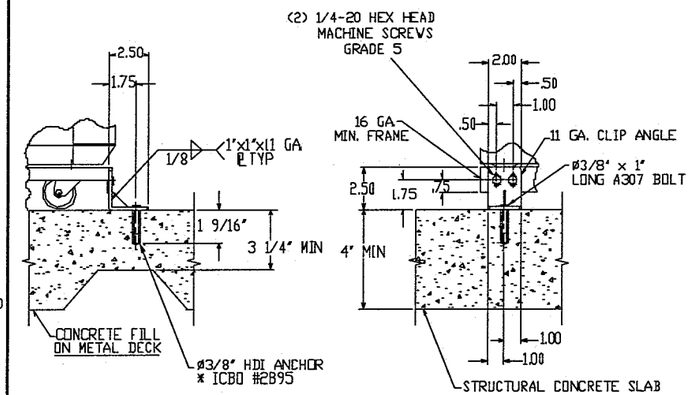

ANCHORAGE TO STRUCTURAL SLAB

SIZE	DWG NO.	REV
B	2715 G01	E

SCALE: NONE SHEET 2 OF 2