NOTES:
RCD: xxx+/-xxx STD: .xxx+/-.xxx Key Dimension: *
1 RCD: Required Control Dimension ,These Dimensions need Process control & capability(Initial and ongoing), 100%Inspection, poke yoke, etc.as appropriate.
2 STD: Statistically Toleranced Dimension ,These Dimensions need demonstration of ongoing process capability (CpK/PpK).
3 Key Dimension:These Dimensions are defined by ME/Mfg.and need inspection as appropriate. If you want more information,please review the criterions of <TC-RDW-18>and<TC-QAW-40>

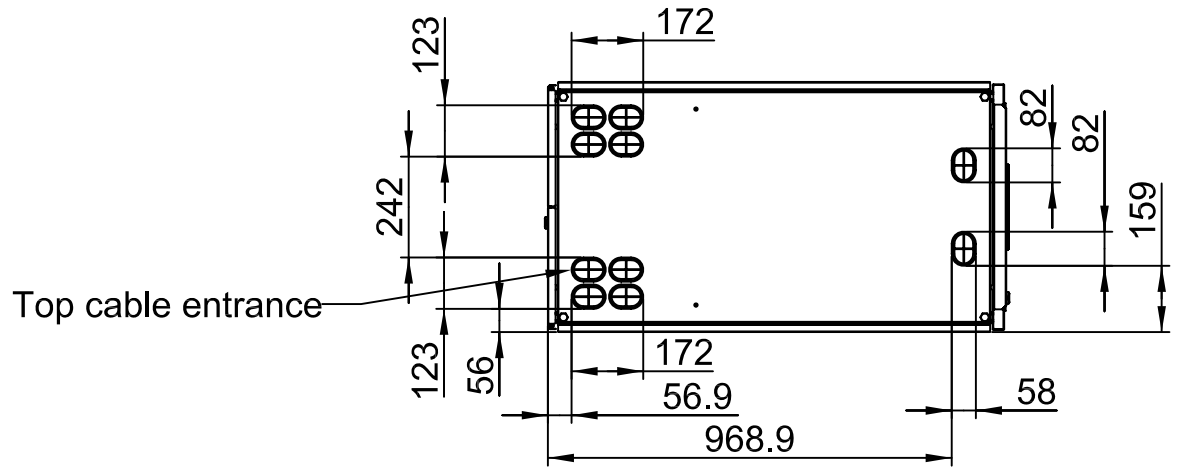

TOP VIEW

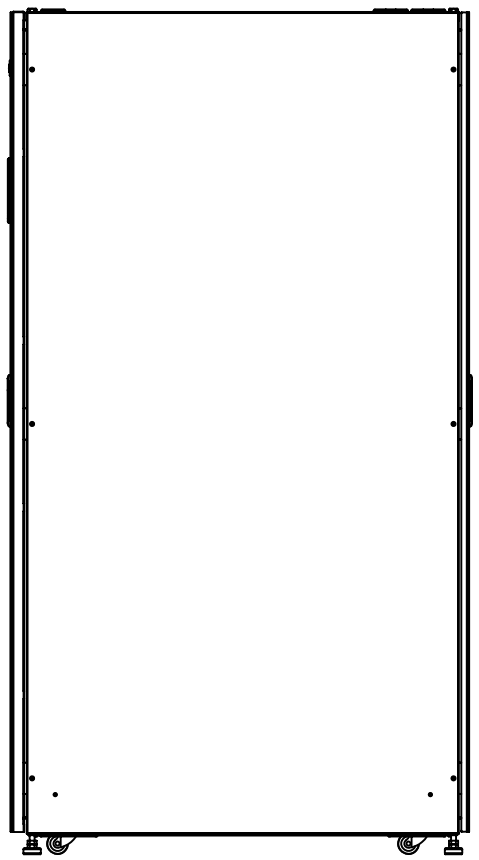

SIDE VIEW

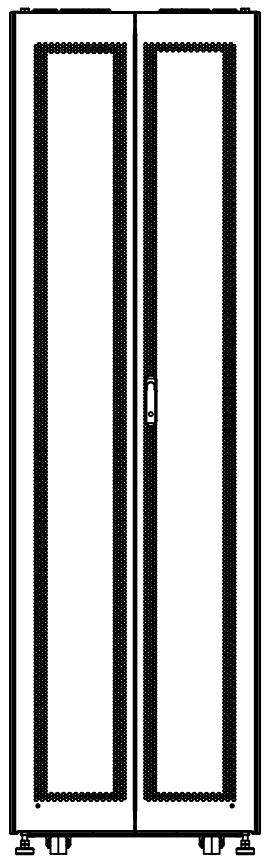

REAR VIEW

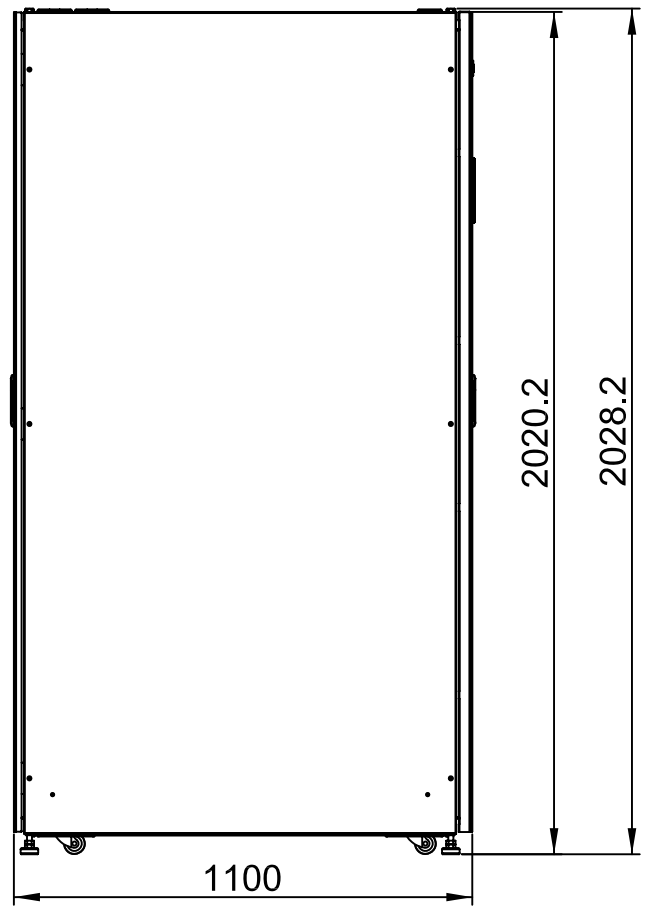

SIDE VIEW

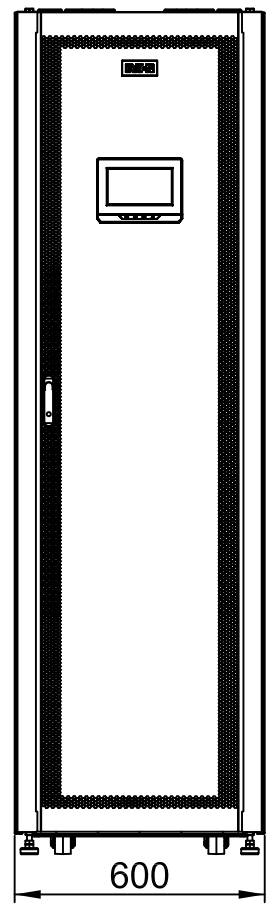

FRONT VIEW

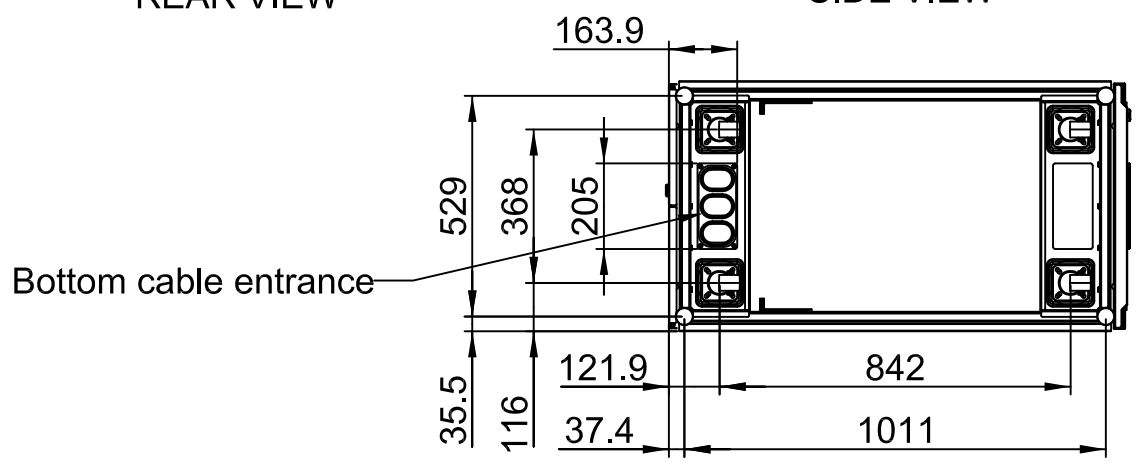

BOTTOM VIEW

METRIC	THIRD ANGLE PROJECTION	EATON CORPORATION			
DESCRIPTION: 93PR75KW_OVERALL_DRAWING					
DRAWN BY:		ECO:	NAME:	REVISION: 00	SIZE: A0
MODEL NO:					SCALE:
CHECKED:		DOCUMENT TYPE:	93PR75KW_OVERALL_DRAWING	STATE: RELEASE	1:5
SAFETY:		PRO-E DRAWING			SHEET:
APPROVED:					1 OF 1

EATON CORPORATION • CONFIDENTIAL AND PROPRIETARY
NOTICE TO ALL PERSONS RECEIVING THIS DRAWING AND SPECIFICATION: THIS DRAWING IS THE SOLE PROPERTY OF EATON CORPORATION. YOU ARE PERMITTED TO USE THIS DRAWING AND SPECIFICATION ONLY FOR THE PURPOSE FOR WHICH IT IS SUBMITTED BY EATON CORPORATION. UNLESS YOU HAVE OTHER WRITTEN AGREEMENT WITH EATON CORPORATION GOVERNING THE USE OF THIS DRAWING AND SPECIFICATION, YOU ARE PERMITTED TO HOLD THIS DRAWING AND SPECIFICATION IN CONFIDENCE, MAKE NO COPIES, AND YOU AGREE TO RETURN THIS DRAWING AND SPECIFICATION TO EATON CORPORATION UPON THE EARLIER OF EATON'S REQUEST OR YOUR COMPLETION OF THE PURPOSE FOR WHICH IT IS SUBMITTED. THE INFORMATION CONTAINED IN THIS DRAWING IS THE SOLE PROPERTY OF EATON CORPORATION. ANY REPRODUCTION IN PART OR AS A WHOLE WITHOUT THE WRITTEN PERMISSION OF EATON CORPORATION IS PROHIBITED.